FIG. 5

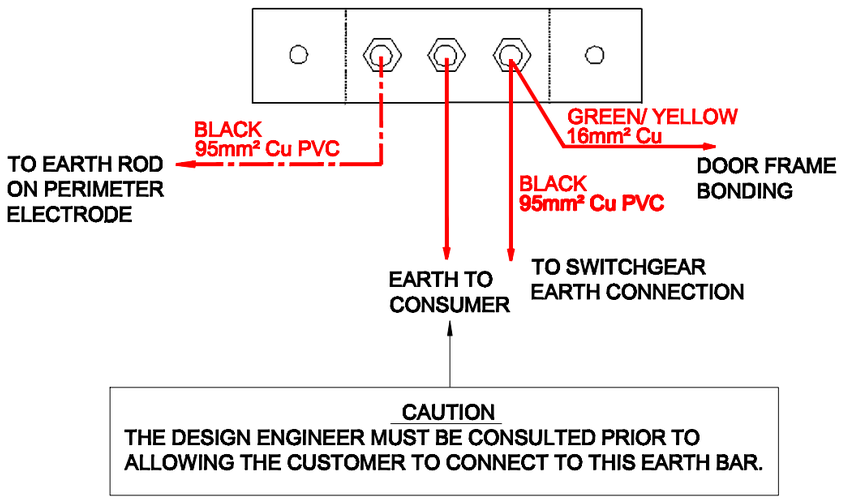

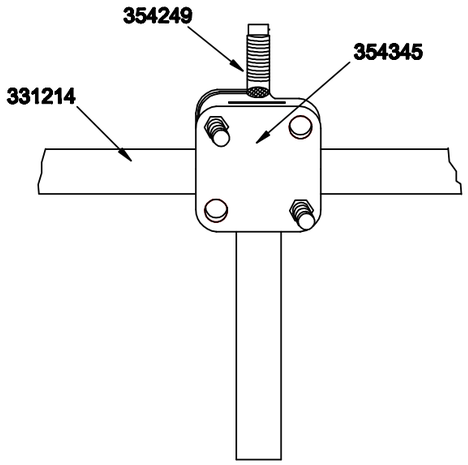

FIG. 1

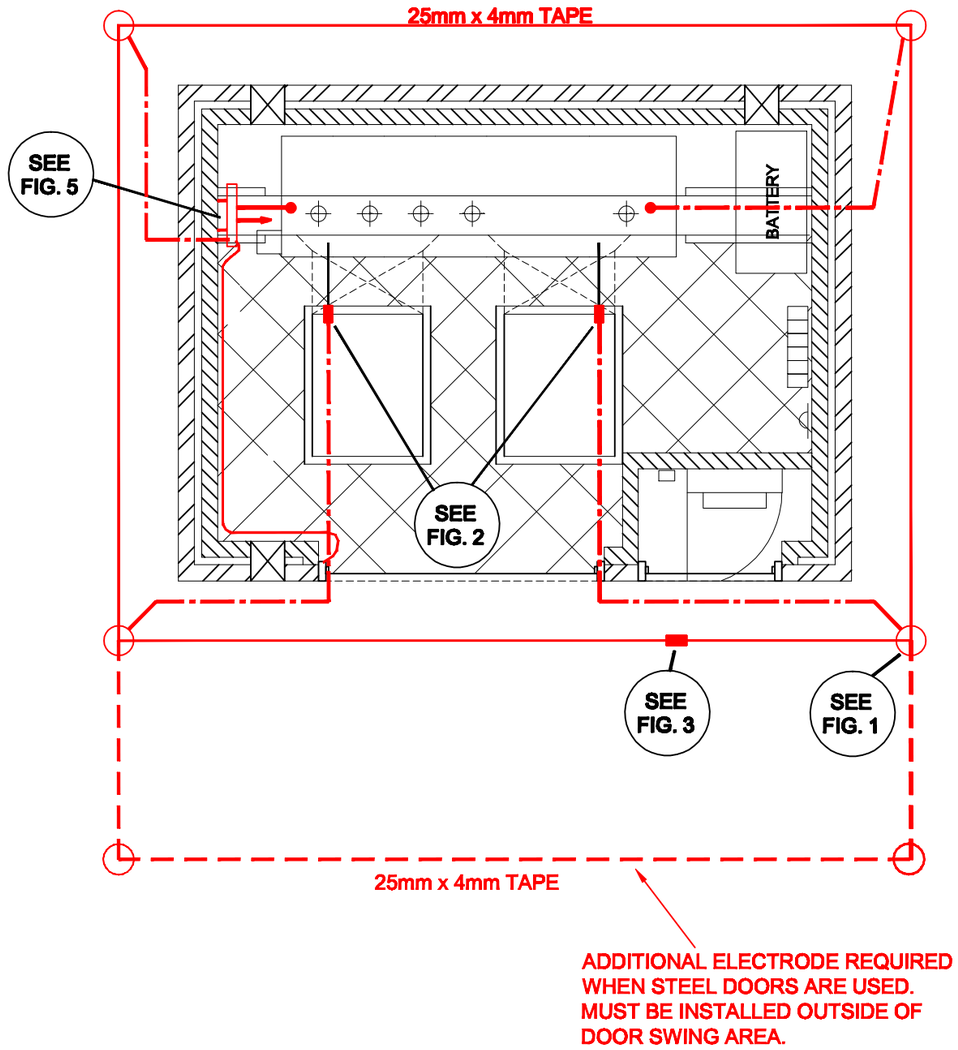

REBAR CONNECTION

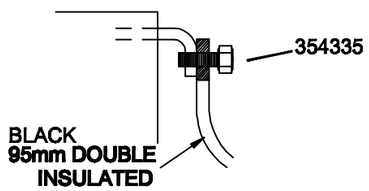

FIG. 2

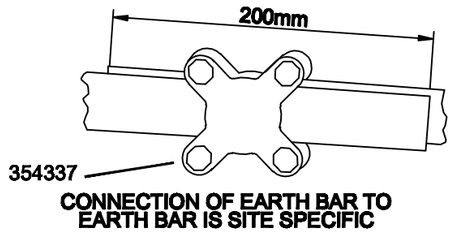

CONNECTION OF EARTH BAR TO
EARTH BAR IS SITE SPECIFIC

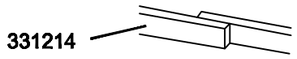

FIG. 3

HOT Site - (Separate Site)

- Perimeter electrode to be installed in direct contact with the soil at a depth of 0.6M to 1.2M on the outer edge of the foundation. (25mm x 4mm Copper earth tape to be used with 'Property of Northern Powergrid' engraved on tape).
- Earth rods to be installed at a depth of 1.2M (2.4M in Rural Environments).
- Bonding from perimeter nest to switchgear, transformer, LV cabinet and rebar to be 95mm2 Cu Black PVC covered conductor.
- Bonding from metal door frame to switchgear to be 16mm2 Cu Green / Yellow PVC covered conductor.
- All external joints to be covered with denso mastic tape.
- Substations with metal doors will require additional perimeter earth electrode at the front of the substation, see additional layout on drawing.
- HV / LV earth link to be removed for separate earths
- LV electrode to be installed at a minimum distance of 9M away from HV earth. (Conductor to be 95mm2 Cu Black PVC covered conductor).
- 13A Socket in LV cabinet to be disconnected for separate earths.
- Insulated cable glands to be used at LV cabinet and switchgear end of cable for all auxiliary LV cables to tripping panels or battery charger.
- Northern Powergrid switch chamber to be fitted out with PVC conduit and PVC fittings to reduce touch potential.
- Any exposed LV earthed equipment to be located outside of touch potential with HV equipment as far as reasonably practicable.
- Warning notice to be fitted for separate earths with wording 'HOT SITE EARTHING - Caution - Avoid making simultaneous contact between the high voltage metalwork earthing and low voltage earthing system'. Label to be sized at 150mm x 100mm with yellow background and black text.
- Where heating is required at a HOT Site, tubular heaters must be covered with unearthed protective guard or high level heaters must be installed.
- Substations with metal doors will require additional perimeter earth nests at the front of the substation, see additional layout on drawing.
- Where HV and LV earths are separated the resistance of the HV earth electrode will be sufficiently low as to limit the earth potential rise to 2kV or less during fault conditions. The maximum resistance value for the HV earth electrode will be confirmed by the Design Engineer. The LV earth electrode resistance must be less than 20ohms.

Use this drawing in conjunction with Northern Powergrid policy – IMP/010/011 Code of Practice for Earthing LV Networks and HV Distribution Substations and supplementary drawing C978643 (Earth Point Connection Details).

Where it isn't technically possible to construct a substation outside the confines of a building a bespoke earthing design must be produced based on the principles in IMP/010/011.

Steel Kiosk Substationswill require additional perimeter earth electrodes;these will be considered on an individual basis.

NORTHERN POWERGRID		Lloyds Court, 78 Grey Street, Newcastle Upon Tyne, NE1 6AF
Manufacturer Details		20KV EXTENSIBLE HV PANEL WITH HV METERING ANNEXE EARTHING ARRANGEMENT - SEPERATE SITE (HOT)
Sheet No. 1	Scale N.T.S.	
Prepared By Barbara.Gordon		Type PLANT DIAGRAMS WIRING
Revised 12/01/17	Grid Reference	Ref No. C1010869 Historic Drg.No. C1010869
Date Issued 27/06/12	Checked By S CRAWFORD	Revision C Notes DOC C1011099